Synchronous Counters

This experiment consists of two parts. In Part A, we will study synchronous counters with different cycle lengths using four D flip-flops available in the **CD4035** Register chip. In Part B, we will study different Shift Register Counters using the **CD4035** as a 4-bit Shift Register, by connecting the D flip-flops in tandem. The slow free-running Clock available on the Digital Kit will be used throughout as the Clock input. The two slide switches on the Kit should therefore be set to the MANUAL and SLOW positions to obtain the desired clock.

Fig. 9.1 depicts the interconnections within the **CD4035** Register chip. The four flip-flops have a common positive-logic Clock (***CK***) and asynchronous Reset (***R***) inputs. Flip-flop $\mathbf{FF_0}$ is a J-K' flip-flop, with its inputs J_0 and K_0' available at pins 4 and 3 of the chip, while the other three flip-flops are D flip-flops. This chip can be used in two different manners depending on the choice of the Mode input ***M***. If ***M*** = 1, the four D flip-flops in the chip work as independent flip-flops, and $Q_3Q_2Q_1Q_0 \leftarrow D_3D_2D_1D_0$ in parallel (simultaneously) at every LOW→HIGH transition of the clock input ***CK***. If ***M*** = 0, the four flip-flops are connected in tandem to form a 4-bit shift register, so that if J_0 and K_0' are connected together to an external serial input D_0, the bits shift from left to right: $D_0 \rightarrow Q_0 \rightarrow Q_1 \rightarrow Q_2 \rightarrow Q_3$ at every LOW→HIGH transition of ***CK***.

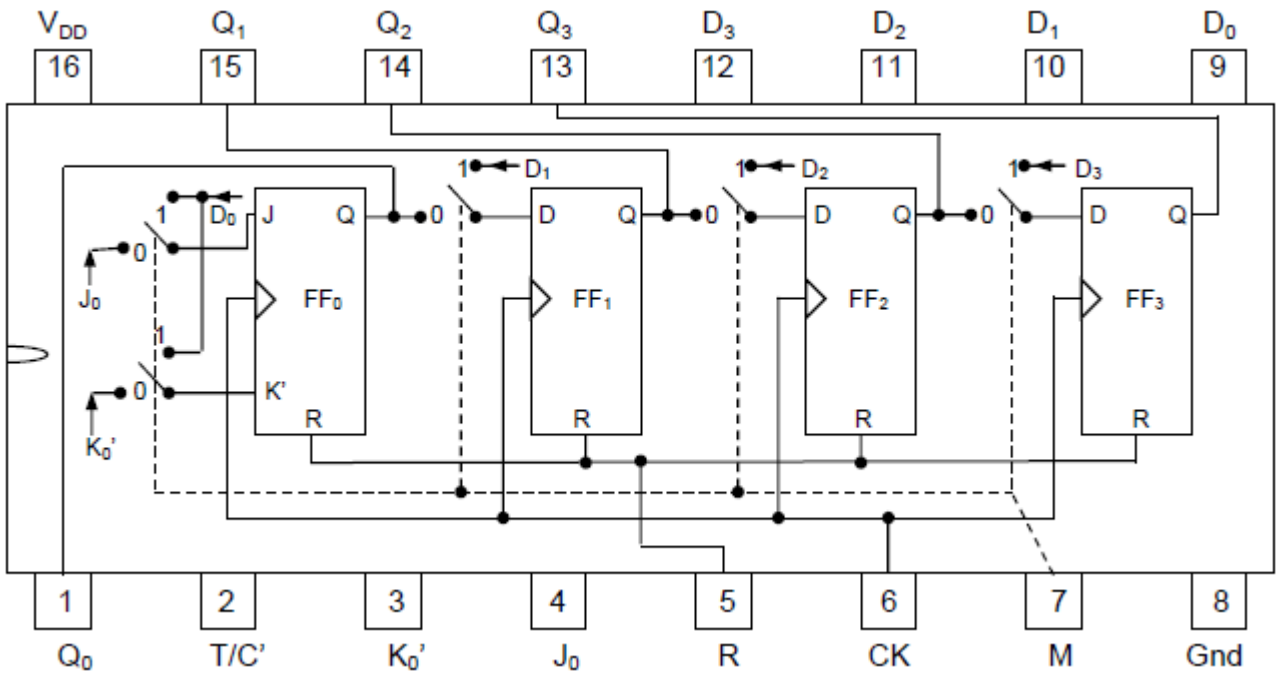

Fig. 9.1 Schematic Diagram of the 4-bit Serial / Parallel Register CD4035

A. <u>Binary and Decade Counters</u>

This counter will be implemented by using the **CD4035** chip in the PARALLEL mode. The complete logic expressions for the four ***D*** inputs in terms of the four ***Q*** outputs are as follows:

$$D_0 = Q_0 \oplus 1,\ D_1 = Q_1 \oplus Q_0,\ D_2 = Q_2 \oplus (Q_1 \bullet Q_0),\ D_3 = Q_3 \oplus (Q_2 \bullet Q_1 \bullet Q_0).$$

In effect, the D flip-flops are converted into T flip-flops by applying the logic $D_k = Q_k \oplus T_k$ (k = 0, 1, 2, 3), and then the counter is made by applying the T inputs according to the logic:

$$T_0 = 1,\ T_1 = Q_0,\ T_2 = Q_1 \bullet Q_0,\ T_3 = Q_2 \bullet (Q_1 \bullet Q_0).$$

Four XOR gates from a **CD/HEF 4070** chip and two 2-input AND gates from a **74HC08** chip will be used for implementing this logic. Both these chips have been used in earlier experiments.

Decade Counters, counting from 0 to 9 and back to 0, are very convenient for displaying the count value in decimal format. The 4-bit Binary Counter discussed above can be modified to a Decade Counter simply by forcing $Q_3Q_2Q_1Q_0 \leftarrow 0000$ when $Q_3Q_2Q_1Q_0$ goes from 1001 to 1010. The **CD4035** has a very useful CLEAR input ***R*** which can be used for this purpose by applying the logic $R = Q_3 \bullet Q_1$.

1. **<u>Before coming to the lab</u>:** Verify that the given logic expressions do generate the required state sequences (state = $Q_3Q_2Q_1Q_0$) both for the 4-bit Binary Counter and for the Decade Counter, representing the sequences of decimal numbers from 0 to 15 and back and from 0 to 9 and back respectively. Draw the complete circuit diagram, indicating all pin numbers and their interconnections.
2. Connect the ***T/C'*** (True/Complement) input of the **CD4035** chip to V_{DD} (≡ '1'), and $Q_0\ Q_1\ Q_2\ Q_3$ to four LED displays ***in that order*** from left to right. These LEDs will now indicate the TRUE outputs of the four flip-flops. Connect the common ***CK*** input to the **Clock Generator** output of the Kit.
3. Connect the ***M*** input to V_{DD} (≡ '1') and the ***R*** input to **Gnd**, thereby putting the flip-flops in the parallel mode and disabling the CLEAR input. Set up the 4-bit Binary counter, Run the counter using the Slow Automatic Clock available on the Kit and tabulate the state sequence for the entire cycle.
4. Modify the binary counter to a Decade Counter by using one of the remaining AND gates from the **74HC08** chip to apply the logic $R = Q_3 \bullet Q_1$ to the CD4035 chip. Repeat step **A.2**.

B. <u>Shift Register Counters</u>

Three types of shift register counters will be studied in this experiment – Ring Counter, Johnson Counter and the Maximum Length Shift register (MLS) Counter. The input logic for D_0 and the cycle length ***N*** for these three counters using a 4-bit shift register are as follows.

RING: $D_0 = Q_3$; $N \leq 4$; JOHNSON: $D_0 = Q_3'$; $N = 8$; MLS: $D_0 = Q_2 \oplus Q_3$; N = 15.

1. Keep the connections made in step **A.2**. Connect the ***M*** and ***R*** inputs to Gnd and connect the J_0 and K_0' inputs together to provide a single input D_0. The flip-flops are now connected as 4-bit Shift Register with a Serial Input D_0. Connect. These connections will remain the same throughout this part of the experiment.
2. Now connect the Serial Input D_0 to an Input Switch and test the operation of the shift register by applying different values of the D_0 input and observing the sequence of Q_0, Q_1, Q_2, Q_3 as the clock runs. Apply four clock pulses with different values of D_0 after every pulse and verify that the bits get shifted serially from left to right in the correct sequence.
3. Create an initial state by applying 4 clock pulses manually, with an appropriate sequence of D_0 inputs through the Input Switch.
4. Now disconnect the D_0 input from the Input Switch and set up the Ring Counter by connecting D_0 to Q_3.
5. Apply clock pulses and note the state sequence for the entire cycle.
6. Repeat steps **B.3** and **B.4** for different initial states until all the 16 possible combinations of Q_0, Q_1, Q_2, Q_3 are observed in the sequences. Note the value of the cycle length ***N*** obtained in each case.
7. Set up a Johnson Counter by connecting D_0 to $Q_3' = Q_3 \oplus 1$ generated by an XOR gate. Repeat steps **B.3** and **B.5** for different initial states. Verify that there are only two possible cycles, both with ***N*** = 8.
8. Set up the MLS Counter by connecting D_0 to $Q_2 \oplus Q_3$, generated by an XOR gate. Repeat step **B.5** with any random initial state and verify that there is only one cycle with ***N*** = 15, excluding the state 0000. Start with the state 0000 by repeating step **B.2** and see what happens.